GH-301-AM AND GH-301-BM

- WHIGHT:50g
- HOLDING CAPACITY:45kg
- SPINDLE SUPPLIED:GH-SA-042007(NYLON)
- HANDLE OPENS:190°
- PLUNGER STROKE:15.9mm
- GH-301-AMSS STAINLESS STEEL

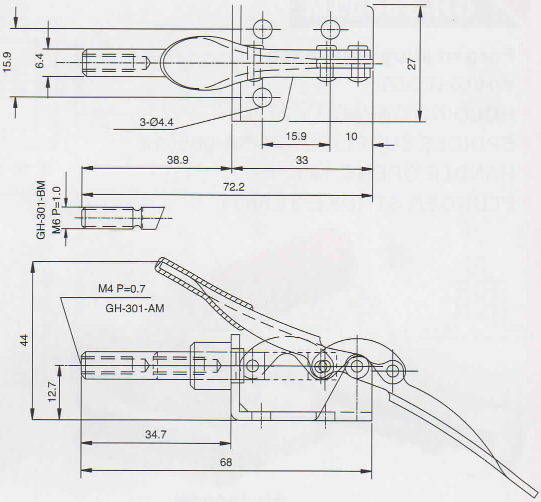
15.9
6.4
27
3-Ø4.4
15.9
10
38.9
33
72.2
GH-301-BM
M6 P=1.0
M4 P=0.7
GH-301-AM
44
12.7
34.7
68

GH-301-AM

UNT:mm

GH-302-FM AND GH-302-FMSS

- WHIGHT:300g
- HOLDING CAPACITY:136kg
- SPINDLE SUPPLIED:GH-SA-085012
- HANDLE OPENS:180°
- PLUNGER STROKE:32mm
- GH-302-FMSS STAINLESS STEEL

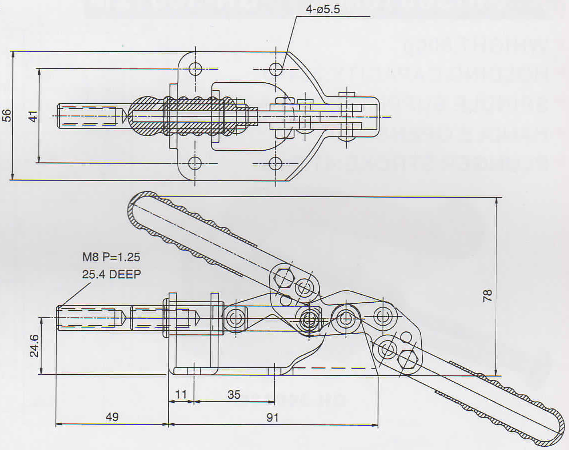
4-ø5.5
56
41
M8 P=1.25
25.4 DEEP
78
24.6
11
35
49
91

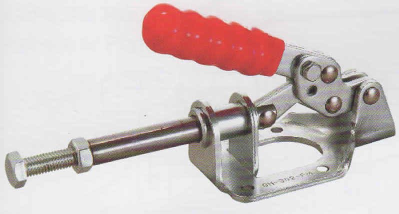

GH-302-FM

UNT:mm

GH-36092M AND GH-36092MSS

- WHIGHT:397g
- HOLDING CAPACITY:180kg
- SPINDLE SUPPLIED:GH-SA-085012
- HANDLE OPENS:180°
- PLUNGER STROKE:31.8mm
- GH-302-FMSS STAINLESS STEEL

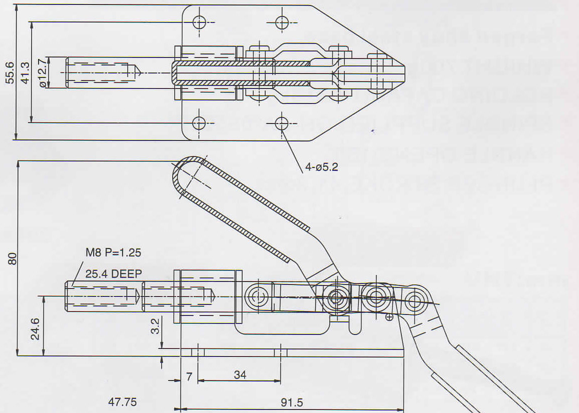
55.6
41.3
ø12.7
4-ø5.2
80
M8 P=1.25
25.4 DEEP
24.6
3.2
7
34
47.75
91.5

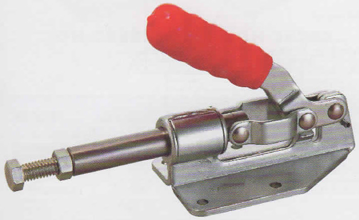

PUSH/PULL TOGGLE CLAMPS

GH-30513

- **Ductile iron base.**
- WHIGHT:4060g
- HOLDING CAPACITY:1600kg
- SPINDLE SUPPLIED:GH-SA-185025
- HANDLE OPENS:180°
- PLUNGER STROKE:76mm

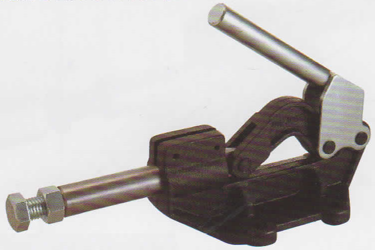

GH-30513

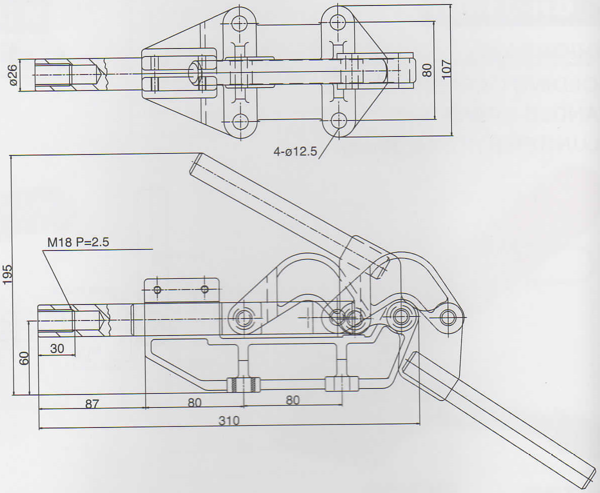
ø26
80
107
4-ø12.5
M18 P=2.5
195
60
30
87
80
80
310

UNT:mm

GH-30250 AND GH-30450

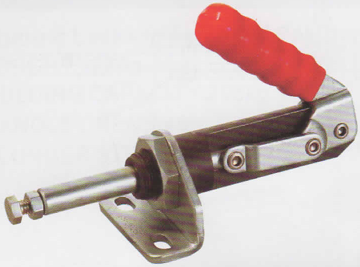

GH-30250

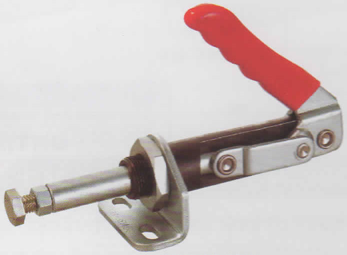

GH-30450

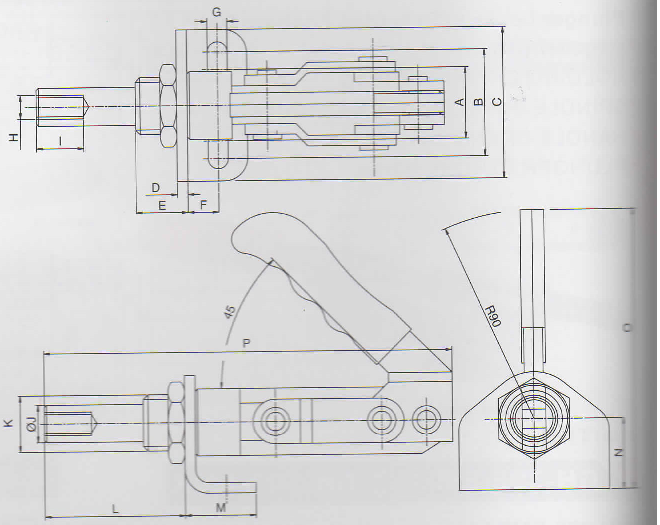
G
H
I
A
B
C
D
E
F
45
P
R90
K
ØJ
L
M
N
O

UNT:mm

MODEL	WEIGHT(g)	HOLDING CAPACITY(kg)	SPINDLE SUPPLIED	HANDLE OPENS	PLUNGER STROKE	A	B	C	D	E	F	G	H	I	ØJ	K	L	M	N	O	P
GH-30250	385	250	GH-SA-062010	190°	32	30	42	57	4	17	10	6.5	M6 P=1.0	12	11	M20 P=1.5	51	23	25	85	
GH-30450	774	450	GH-SA-103015	185°	38	30	45	64	4.5	22	13	8.5	M10 P=1.5	20	16	M24 P=1.5	59.5	30	30	120	

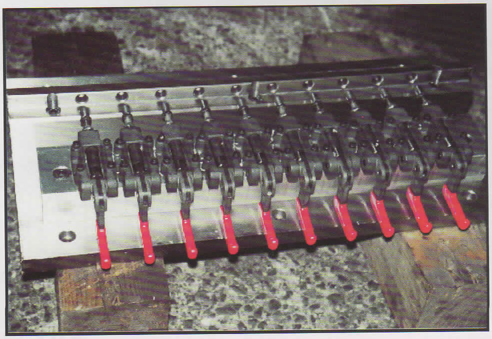

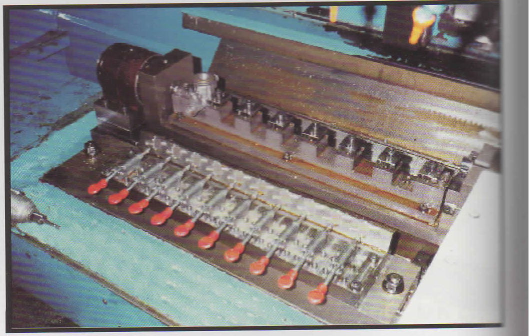

PUSH/PULL TOGGLE CLAMPS

GH-36003M

- **Forged alloy steel base**
- WHIGHT:355g
- HOLDING CAPACITY:272kg
- SPINDLE SUPPLIED:GH-SA-085012
- HANDLE OPENS:180°
- PLUNGER STROKE:31.8mm

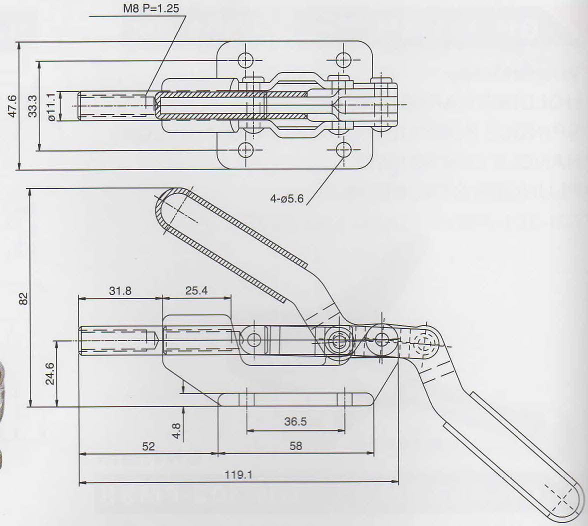
M8 P=1.25
47.6
33.3
ø11.1
4-ø5.6
82
31.8
25.4
24.6
4.8
36.5
52
58
119.1

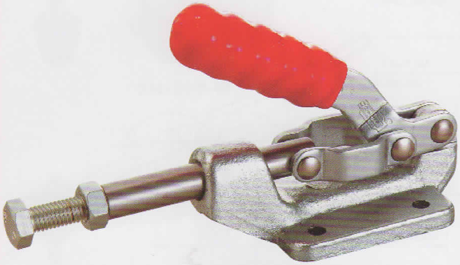

GH-36003M

UNT:mm

GH-36010M AND GH-36012M

- WHIGHT:800g
- HOLDING CAPACITY:364kg
- SPINDLE SUPPLIED:GH-SA-105015
- HANDLE OPENS:180°
- PLUNGER STROKE:41.3mm

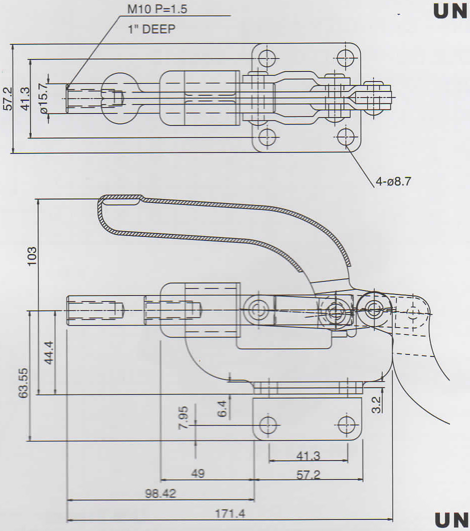
M10 P=1.5
1" DEEP
57.2
41.3
ø15.7
4-ø8.7
103
63.55
44.4
7.95
6.4
3.2
41.3
49
57.2
98.42
171.4

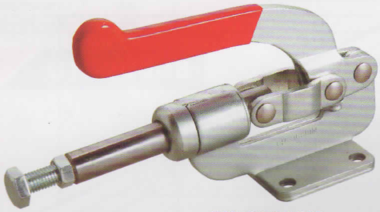

GH-36010M

MODEL	DESCRIPTION
GH-36010M	FLANGED BASE
GH-36012M	STRAIGHT BASE

UNT:mm

GH-30607M AND GH-30608M

- **Forged alloy steel base**
- WHIGHT:700g
- HOLDING CAPACITY:318kg
- SPINDLE SUPPLIED:GH-SA-085012
- HANDLE OPENS:180°
- PLUNGER STROKE:41.3mm

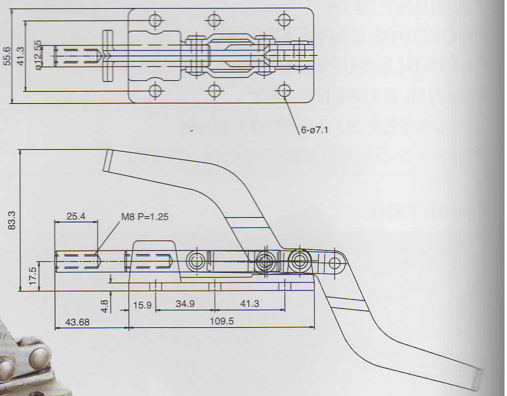
55.6
41.3
ø12.55
6-ø7.1
83.3
25.4
M8 P=1.25
17.5
4.8
15.9
34.9
41.3
43.68
109.5

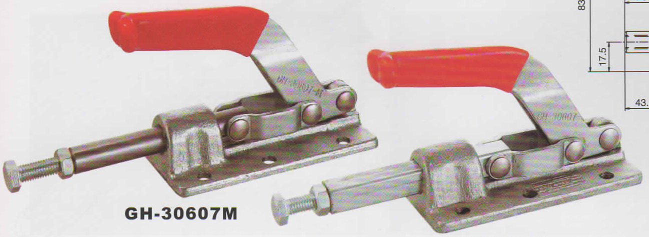
GH-30607M

GH-30608M

UNT:mm

GH-36330M

- **Forged alloy steel base**
- WHIGHT:935g
- HOLDING CAPACITY:1136kg
- SPINDLE SUPPLIED:GH-SA-105015
- HANDLE OPENS:180°
- PLUNGER STROKE:50.8mm

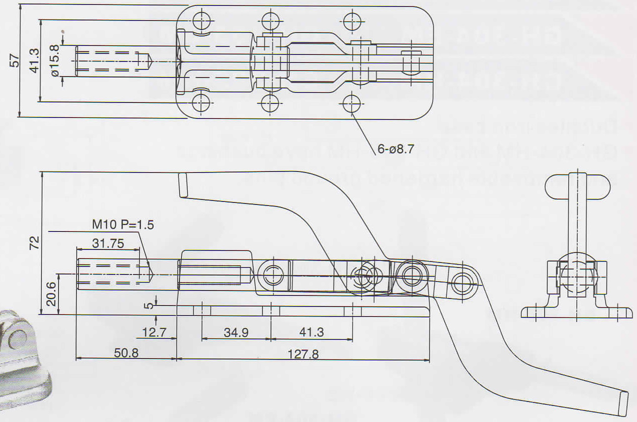
57
41.3
ø15.8
6-ø8.7
72
M10 P=1.5
31.75
20.6
5
12.7
34.9
41.3
50.8
127.8

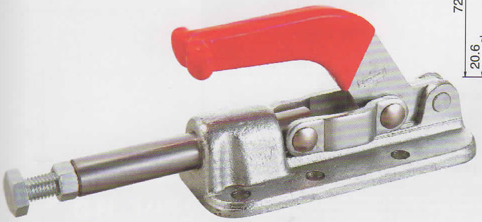
GH-36330M

UNT:mm

GH-36202M
GH-36204M
GH-36224M

- Plunger Clamp With Threaded Collar for Mounting Through Panels or Plates

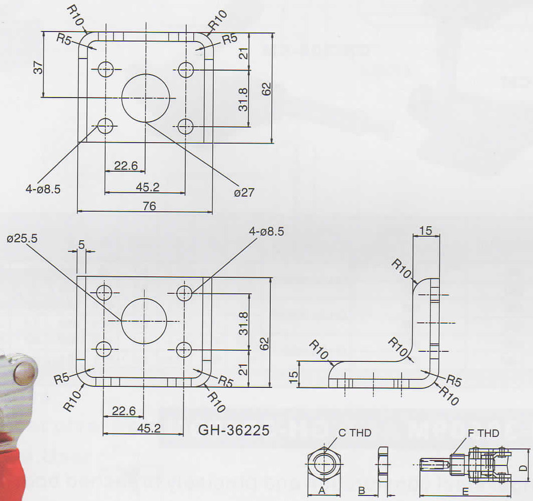
R10
R5
R10
R5
37
21
31.8
62
22.6
45.2
76
4-ø8.5
ø27
ø25.5
5
4-ø8.5
15
R10
31.8
62
21
R10
R10
R10
15
R5
R10
R5
R10
22.6
45.2
GH-36225
C THD
F THD
A
B
E
D

GH-36224M

GH-36225

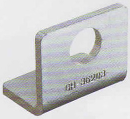

GH-36203

GH-36205

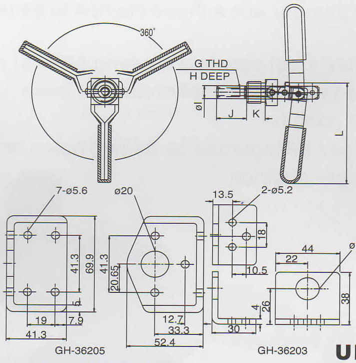
360°
G THD
H DEEP
øI
J
K
L
7-ø5.6
ø20
13.5
2-ø5.2
41.3
69.9
41.3
20.65
5
19
7.9
41.3
12.7
33.3
52.4
18
10.5
44
22
ø16
4
26
38
30
GH-36205
GH-36203

UNT:mm

MODEL	WEIGHT(g)	HOLDING CAPACITY(kg)	SPINDLE SUPPLIED	PLUNGER STROKE	OPTIONAL MOUNTING BRACKET	A	B	C	F	D	E	G	H	ØI	J	K	L
GH-36202M	113	91	GH-SA-064010	19	GH-36203	23	6.4	M16 P=1.5		24	63	M6 P=1	15.8	9.4	20.6	12.7	75
GH-36204M	270	136	GH-SA-085012	38	GH-36205	30	6.4	M20 P=1.5		31	115	M8 P=1.25	25.4	11	39.7	15.9	98
GH-36224M	690	318	GH-SA-105015	66.8	GH-36225M	41	6.4	M27 P=2.0		39	169.5	M10 P=1.5	31.75	15.8	69	22	137
GH-36202-MSS	STAINLESS STEEL																
GH-36204-MSS	STAINLESS STEEL																
GH-36224-MSS	STAINLESS STEEL																

PUSH/PULL TOGGLE CLAMPS

GH-304-CM AND GH-305-CM
GH-304-EM AND GH-305-EM
GH-304-HM AND GH-305-HM

- Ductiles iron base
- GH-304-HM and GH-305-HM have bushings and removable hardened ground pins.

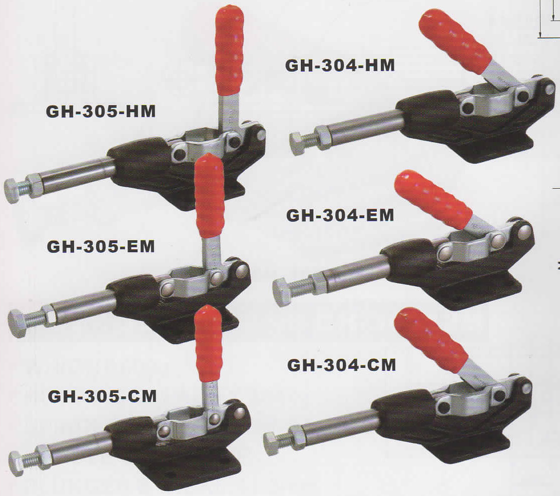
GH-305-HM
GH-304-HM
GH-305-EM
GH-304-EM
GH-305-CM
GH-304-CM

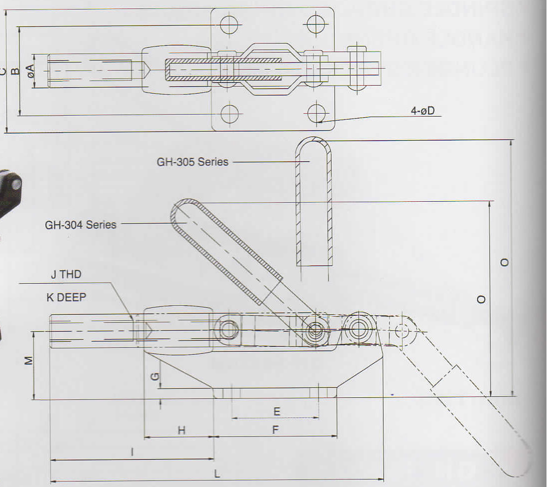
C
B
øA
4-øD
GH-305 Series
GH-304 Series
J THD
K DEEP
O
O
M
G
E
F
H
I
L

UNT:mm

MODEL	WEIGHT(g)	HOLDING CAPACITY(kg)	SPINDLE SUPPLIED	ØA	B	C	ØD	E	F	G	H	I	J	K	L	M	O	PLUNGER STROKE
GH-304-CM	340	227	GH-SA-085012	12.7	41.4	57.2	6.7	35	52.4	4.8	20.6	52.4	M8 P=1.25	30.2	125.4	25.4	74.6	32
GH-305-CM	340	227		12.7	41.4	57.2	6.7	35	52.4	4.8	20.6	52.4	M8 P=1.25	30.2	125.4	25.4	90.5	
GH-304-EM	580	386	GH-SA-105015	16	41.4	57.2	8.3	41.4	58.8	4.8	31.8	81	M10 P=1.5	39.2	158.8	31.8	98.4	42
GH-305-EM	580	386		16	41.4	57.2	8.3	41.4	58.8	4.8	31.8	81	M10 P=1.5	39.2	158.8	31.8	122.8	
GH-304-HM	1480	680	GH-SA-125017	19.2	50.8	71.4	8.3	50.8	73.2	6.4	50.8	120.8	M12 P=1.75	49.2	238.2	44.4	133.4	60
GH-305-HM	1480	680		19.2	50.8	71.4	8.3	50.8	73.2	6.4	50.8	120.8	M12 P=1.75	49.2	238.2	44.4	171.6	
GH-304-EMSS	STAINLESS STEEL																	

GH-30509M AND GH-30609M

- High strength steel consturction and precisely broached body for square plunger,allow these clamps to be used as pin locating gauges.
- Hardened steel pins and bushing fitted at pivot points.
- Supplied with separate handle and base .Users can weld them at desired position.
- Clamp can be mounted by drilling holes on the base or be welded at a proper position.

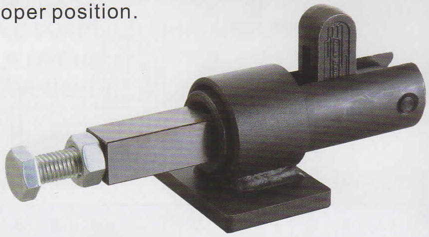

GH-30509M

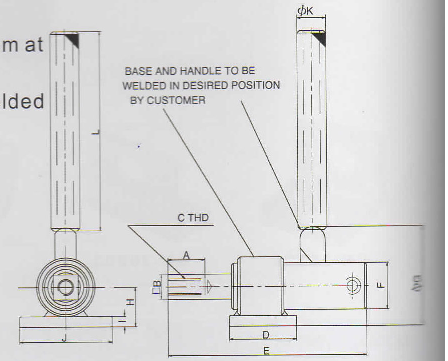
ØK
BASE AND HANDLE TO BE WELDED IN DESIRED POSITION BY CUSTOMER
L
C THD
A
□B
H
I
J
D
E
F
ØG

UNT:mm

MODEL	WEIGHT(g)	HOLDING CAPACITY(kg)	SPINDLE SUPPLIED	PLUNGER STROKE	A	□B	C	D	E	ØF	G	H	I	J	ØK	L
GH-30509M	1330	1136	GH-SA-125017	46	25.4	19	M12 P=1.75	50.8	150	35	74	30	8	70	21.7	152
GH-30609M	2820	2273	GH-SA-165020	59.5	38.1	25	M16 P=2	68.3	198	45	87	40	11.1	90.5	27.2	152

GH-30510M

NEW

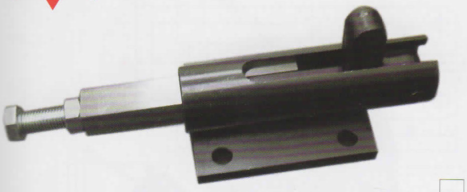

GH-30510M

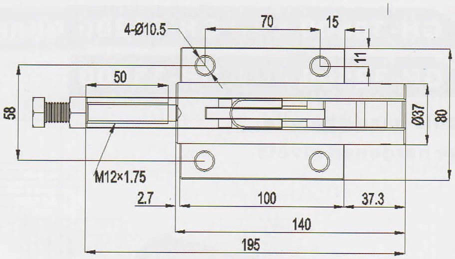
4-Ø10.5
70
15
11
50
58
Ø37
80
M12×1.75
2.7
100
37.3
140
195

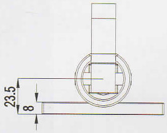

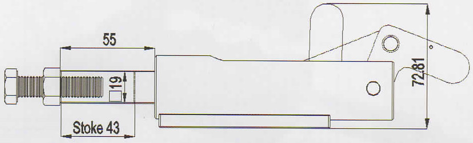
55
19
Stoke 43
72.81

GH-30510M

GH-30511

NEW

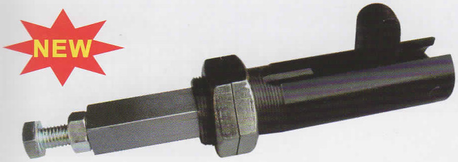

GH-30511

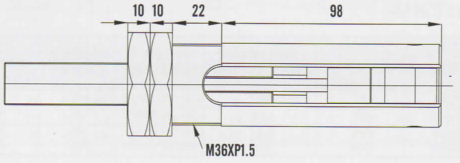
10
10
22
98
M36XP1.5

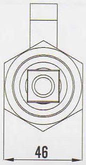

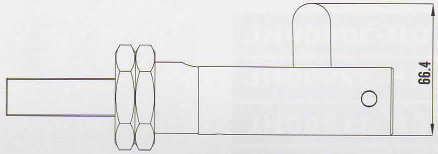

GH-30511M

UNT:mm

GH-30519M AND GH-30619M

- High strengh steel consturction and precisely Broached body for square plunger,allow these Clamps to be used as pin locating gauges.
- Hardened steel pins and bushing fitted at pivot points.
- Supplied with separate handle and base.User can weld them at desired position.
- Clamps can be mounted by drilling holes on the base or be welded at a proper position.

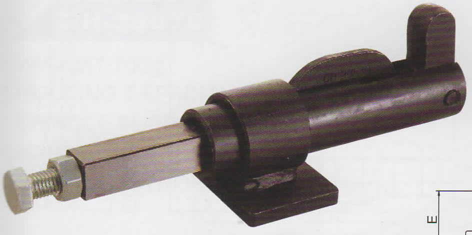

GH-30519M

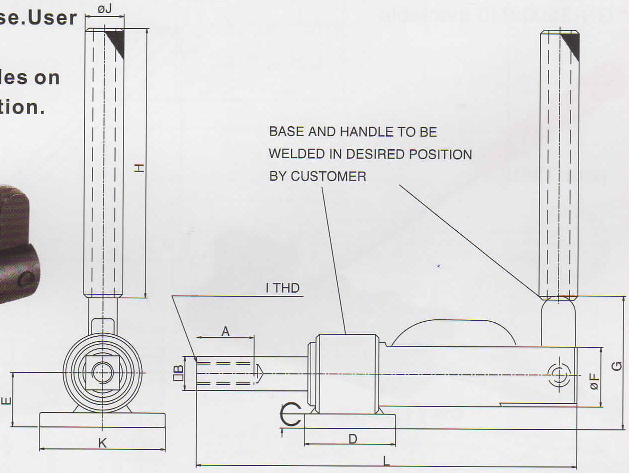
øJ
H
E
K
BASE AND HANDLE TO BE
WELDED IN DESIRED POSITION
BY CUSTOMER
I THD
A
□B
C
D
L
øF
G

UNT:mm

MODEL	WEIGHT(g)	HOLDING CAPACITY(kg)	SPINDLE SUPPLIED	PLUNGER STROKE	A	□B	C	D	E	ØF	G	H	I	ØJ	K	L
GH-30519M	1640	1136	GH-SA-125017	59.5	25.4	19	8	50.8	30	35	74	152	M12 P=1.75	21.7	70	212
GH-30619M	3500	2273	GH-SA-165020	77.8	38.1	25	11.1	68.3	40	45	87	152	M16 P=2.0	27.2	90.5	283

GH-30600 AND GH-31200

GH-32500 AND GH-35000

- Ductile base&handle.
- Case hardened pivots.

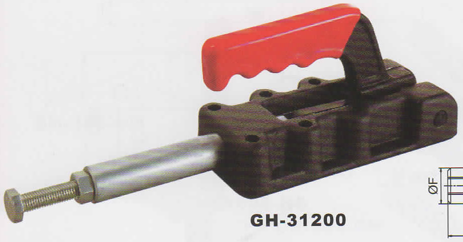

GH-31200

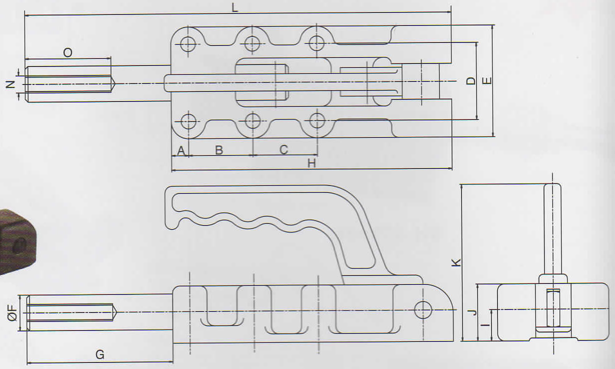
L
O
N
D
E
A
B
C
H
K
ØF
J
I
G

UNT:mm

MODEL	WEIGHT(g)	HOLDING CAPACITY(kg)	SPINDLE SUPPLIED	HANDLE OPENS	PL UNGER STROKE	A	B	C	D	E	ØF	G	H	I	J	K	L	ØM	N	O
GH-30600	510	600	GH-SA-086512	185°	32	25	36.5	–	33.4	46	14	38	89	12	22	67	127	5.5	M8 P=1.25	30
GH-31200	1500	1200	GH-SA-107515	185°	50	8	35	41	41	58	20	55	135	18	32	88	190	8.5	M10 P=1.5	40
GH-32500	3600	2500	GH-SA-127517	185°	75	12	45	45	54	78	25	102	196	22	40	110	298	10.3	M12 P=1.75	60
GH-35000	6500	5000	GH-SA-167520	185°	100	12	70	70	57	84	30	138	254	28	50	123	392	10.3	M16P=2	60

GH-30600HL
GH-32500HL
GH-31200HL
GH-35000HL

- Ductile iron base.
- Optional toggle press frame
- GH-30600MB available.
- GH-31200MB available.
- GH-32500MB available.
- GH-35000MB available.

GH-31200-HL

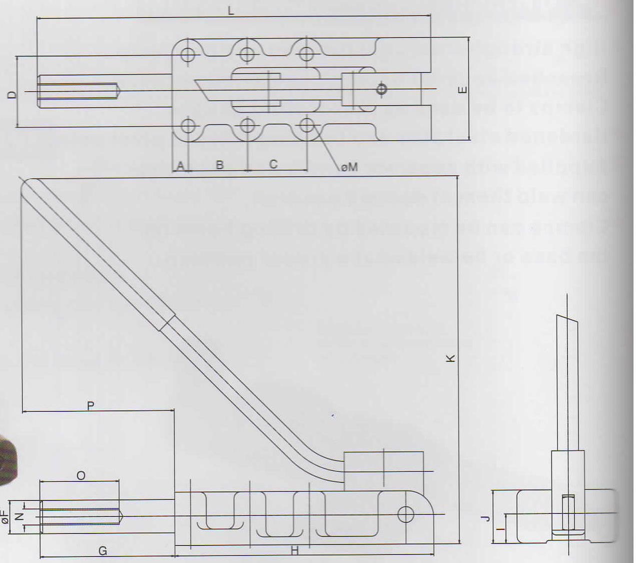
L
D
E
A
B
C
øM
P
K
O
ØF
N
G
H
J

UNT:mm

MODEL	WEIGHT(g)	HOLDING CAPACITY(kg)	SPINDLE SUPPLIED	HANDLE OPENS	PLUNGER STROKE	A	B	C	D	E	ØF	G	H	I	J	K	L	ØM	N	O	P
GH-30600HL	610	600	GH-SA-086512	185°	32	25	36.5	–	33.4	46	14	38	89	12	22	65	127	5.5	M8 P=1.25	30	65
GH-31200HL	1500	1200	GH-SA-107515	185°	50	8	35	41	41	58	20	55	135	18	32	200	135	8.5	M10 P=1.5	40	100
GH-32500HL	4150	2500	GH-SA-127517	185°	75	12	45	45	54	78	25	102	196	22	40	278	298	10.3	M12 P=1.75	60	115
GH-35000HL	7100	5000	GH-SA-167520	185°	100	12	70	70	57	84	30	138	254	28	50	355	392	10.3	M16 P=2	60	172

GH-30600PR GH-31200PR GH-32500PR

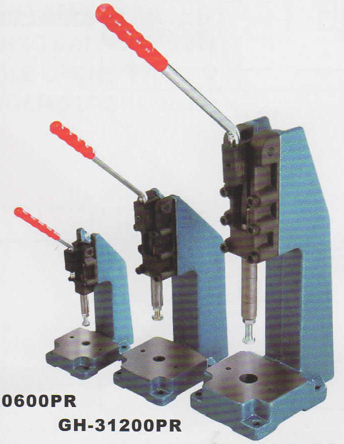

GH-30600PR

GH-31200PR

GH-32500PR

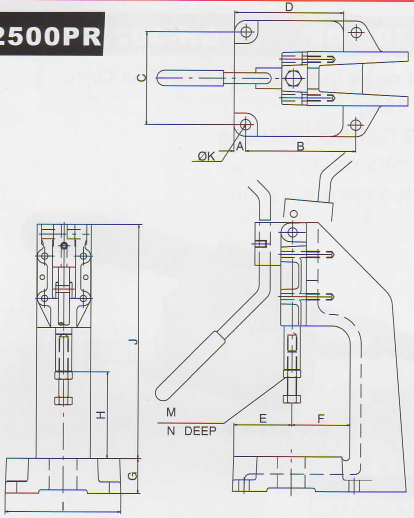
D
C
ØK
A
B
J
H
G
M
N DEEP
E
F

UNT:mm

MODEL	WEIGHT(g)	HOLDING CAPACITY(kg)	SPINDLE SUPPLIED	HANDLE OPENS	PLUNGER STROKE	A	B	C	D	E	F	G	H	I	J	ØK	L	M	N
GH-30600PR	3600	600	GH-SA-086512	185°	32	10	95	80	94	50	50	30	75	100	202	9	150	M8 P=1.25	30
GH-31200PR	7350	1200	GH-SA-107515	185°	50	12.5	115	95	113	60	60	40	100	120	290	11.1	192	M10 P=1.5	40
GH-32500PR	17920	2500	GH-SA-127517	185°	75	12.5	145	125	139	67	75	50	120	150	418	11	238	M12 P=1.75	60

GH-36006

- WHIGHT:70g
- HOLDING CAPACITY:50kg
- SPINDLE SUPPLIED:GH-SA-041507
- HANDLE OPENS:93°
- PLUNGER STROKE:11mm

GH-36006

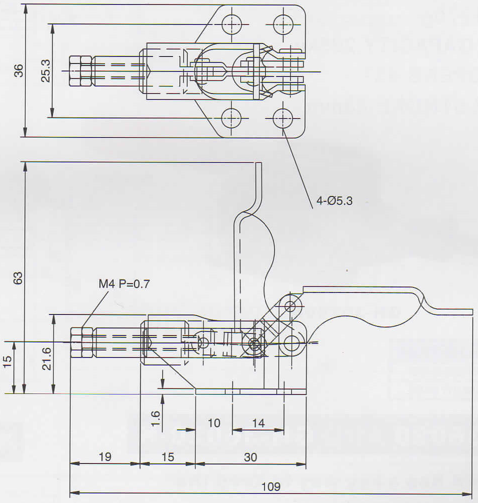
36
25.3
4-Ø5.3
63
M4 P=0.7
15
21.6
1.6
10
14
19
15
30
109

UNT:mm

GH-36070

- WHIGHT:100g
- HOLDING CAPACITY:50kg
- SPINDLE SUPPLIED:GH-SA-051508
- HANDLE OPENS:66°
- PLUNGER STROKE:10mm

GH-36070

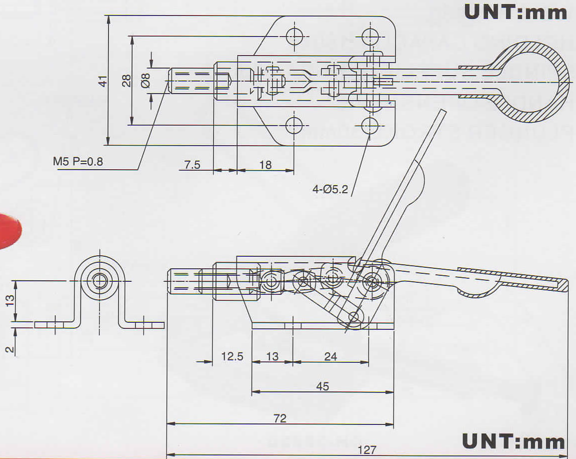
41
28
Ø8
M5 P=0.8
7.5
18
4-Ø5.2
13
2
12.5
13
24
45
72
127

UNT:mm

GH-302-DM AND GH-30282M

- **Plunger Locks in Extended Position Only.**
- WHIGHT:454g
- HOLDING CAPACITY:160kg
- HANDLE OPENS:45⁰
- PLUNGER STROKE:12mm

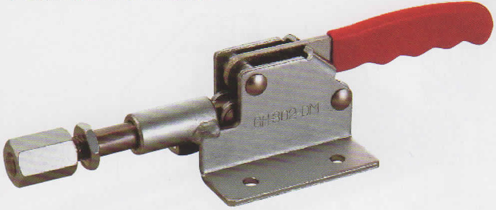

GH-302-DM

MODEL	DESCRIPTION
GH-302-DM	FLANGED BASE
GH-30282M	STRAIGHT BASE

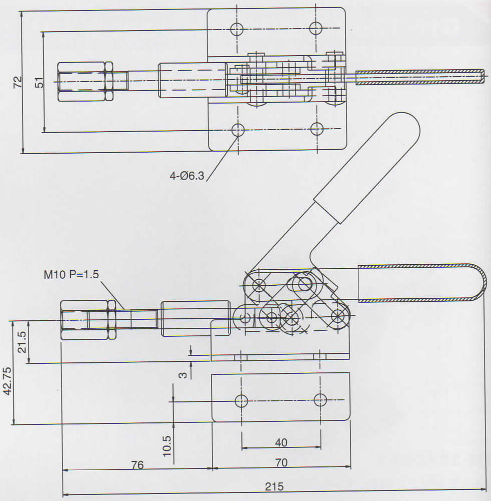
72
51
4-Ø6.3
M10 P=1.5
21.5
42.75
3
10.5
76
40
70
215

UNT:mm

GH-30290M AND GH-30292M

- **Plunger Locks in Extended Position Only.**
- WHIGHT:1270g
- HOLDING CAPACITY:295kg
- HANDLE OPENS:45⁰
- PLUNGER STROKE:23mm

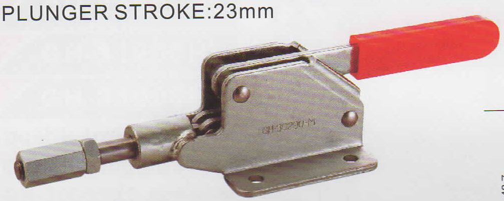

GH-30290M

MODEL	DESCRIPTION
GH-30290M	FLANGED BASE
GH-30292M	STRAIGHT BASE

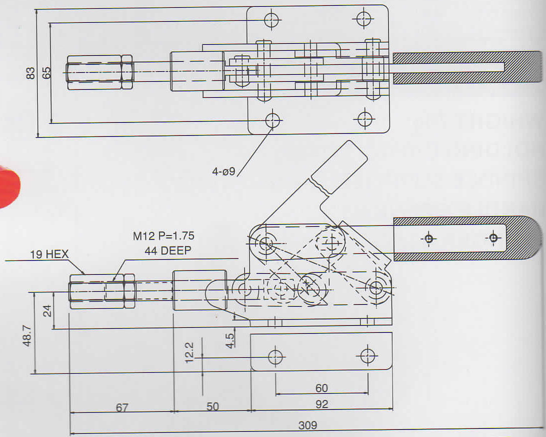
83
65
4-ø9
19 HEX
M12 P=1.75
44 DEEP
24
48.7
12.2
4.5
67
50
60
92
309

UNT:mm

GH-36020 AND GH-36020-K

- **GH-36020-K has a key way to keep the plunger from rotating.**
- WEIGHT:345g
- HOLDING CAPACITY:180kg
- SPINDLE SUPPLIED:GH-SA-085012
- HANDLE OPENS:144.5⁰
- PLUNGER STROKE:30mm

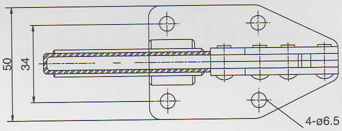

GH-36020-K

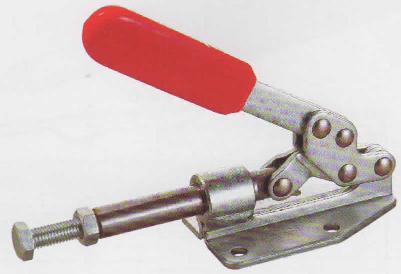

GH-36020

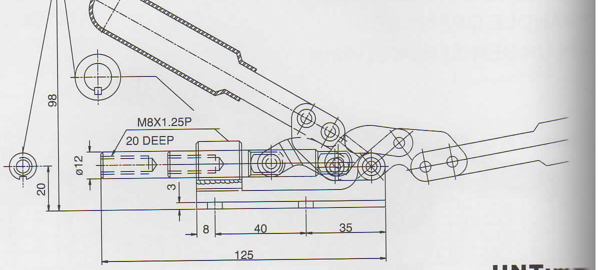

98
M8X1.25P
20 DEEP
ø12
20
3
8
40
35
125

UNT:mm

GH-31501

- WHIGHT:335g
- HOLDING CAPACITY:200kg
- HANDLE OPENS:190°
- PLUNGER STROKE:30mm

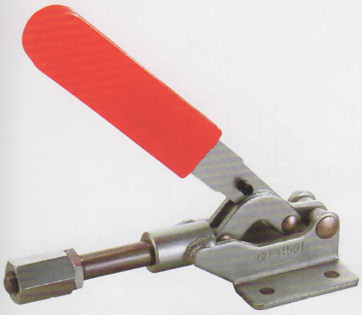

GH-31501

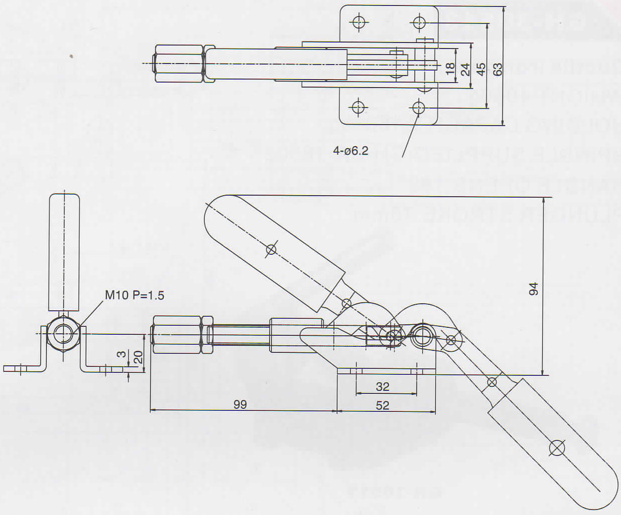

18
24
45
63
4-ø6.2
M10 P=1.5
94
3
20
99
32
52

UNT:mm

GH-36060

- Plunger Locks in Extended Position Only.
- WHIGHT:615g
- HOLDING CAPACITY:300kg
- SPINDLE SUPPLIED:GH-SA-083012
- HANDLE OPENS:76°
- PLUNGER STROKE:28mm

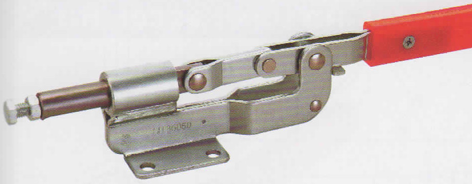

GH-36060

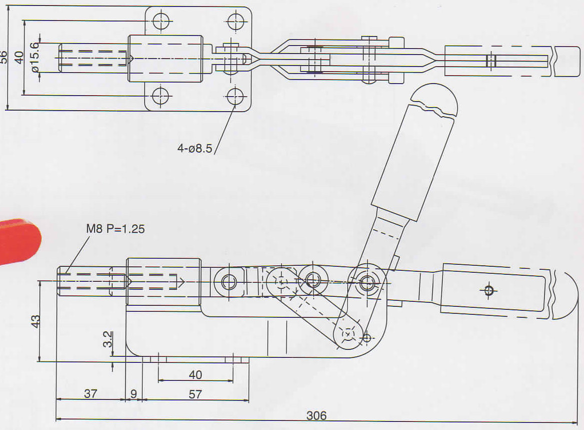

56
40
ø15.6
4-ø8.5
M8 P=1.25
43
3.2
37
9
40
57
306

UNT:mm

GH-303-EM AND GH-303-EMK

- GH-303-EMK has a key way to keep the plunger from rotating.
- WHIGHT:965g
- HOLDING CAPACITY:454kg
- HANDLE OPENS:190°
- PLUNGER STROKE:50mm

GH-303-EM

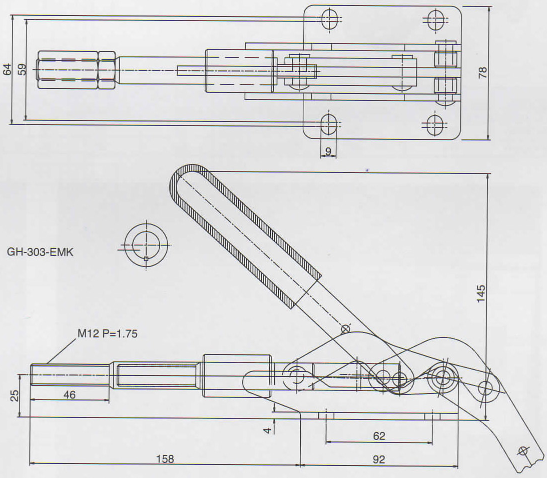

64
59
78
9
GH-303-EMK
145
M12 P=1.75
25
46
4
62
158
92

UNT:mm